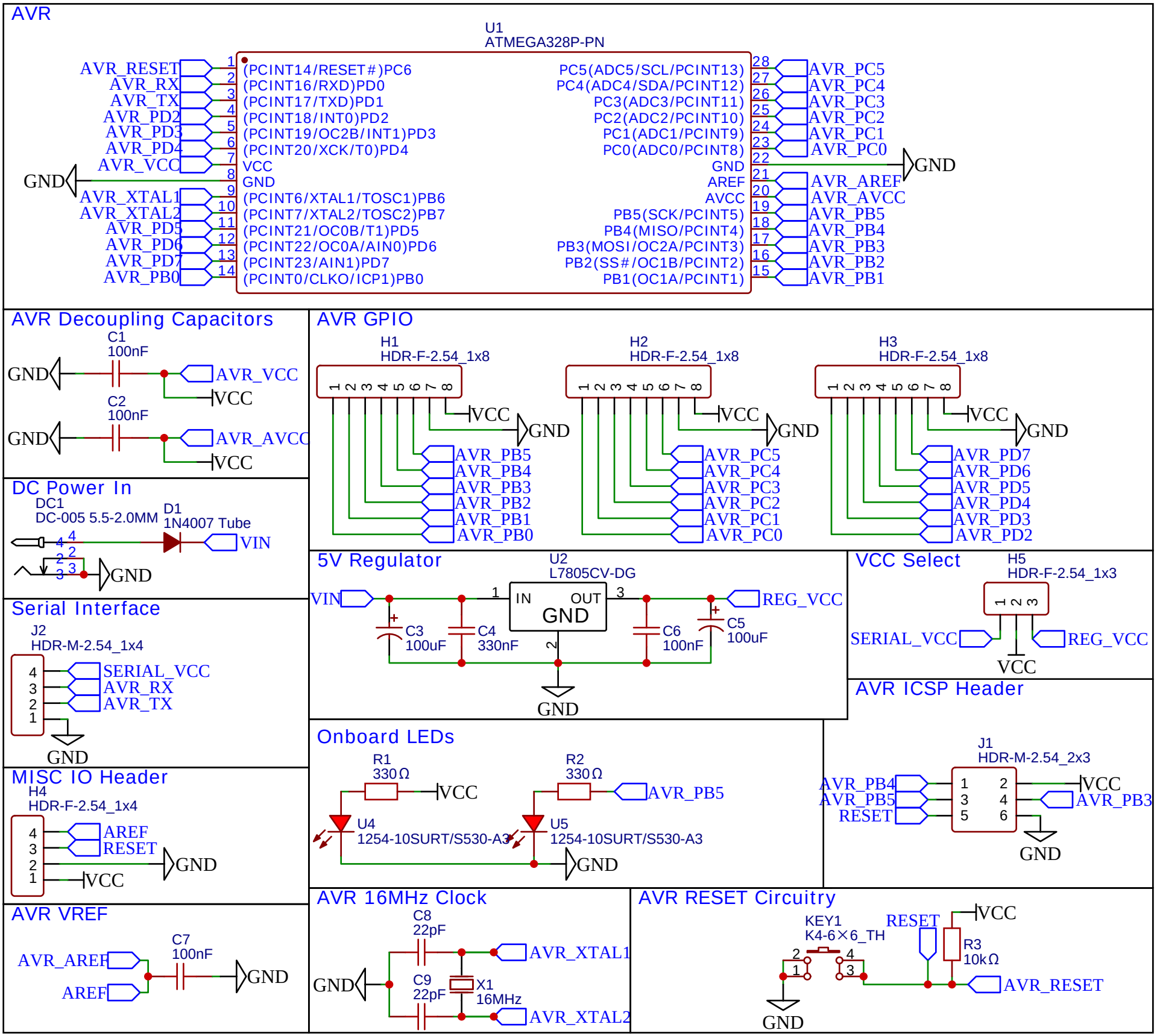
AVR
U1
ATMEGA328P-PN
AVR_RESET
AVR_RX
AVR_TX
AVR_PD2
AVR_PD3
AVR_PD4
AVR_VCC
GND
AVR_XTAL1
AVR_XTAL2
AVR_PD5
AVR_PD6
AVR_PD7
AVR_PB0
(PCINT14/RESET#)PC6
(PCINT16/RXD)PD0
(PCINT17/TXD)PD1
(PCINT18/INT0)PD2
(PCINT19/OC2B/INT1)PD3
(PCINT20/XCK/T0)PD4
VCC
GND
(PCINT6/XTAL1/TOSC1)PB6
(PCINT7/XTAL2/TOSC2)PB7
(PCINT21/OC0B/T1)PD5
(PCINT22/OC0A/AIN0)PD6
(PCINT23/AIN1)PD7
(PCINT0/CLKO/ICP1)PB0
PC5(ADC5/SCL/PCINT13)
PC4(ADC4/SDA/PCINT12)
PC3(ADC3/PCINT11)
PC2(ADC2/PCINT10)
PC1(ADC1/PCINT9)
PC0(ADC0/PCINT8)
GND
AREF
AVCC
PB5(SCK/PCINT5)
PB4(MISO/PCINT4)
PB3(MOSI/OC2A/PCINT3)
PB2(SS#/OC1B/PCINT2)
PB1(OC1A/PCINT1)
AVR_PC5
AVR_PC4
AVR_PC3
AVR_PC2
AVR_PC1
AVR_PC0
GND
AVR_AREF
AVR_AVCC
AVR_PB5
AVR_PB4
AVR_PB3
AVR_PB2
AVR_PB1
AVR Decoupling Capacitors
C1
100nF
GND
AVR_VCC
VCC
C2
100nF
GND
AVR_AVCC
VCC
AVR GPIO
H1
HDR-F-2.54_1x8
VCC
GND
AVR_PB5
AVR_PB4
AVR_PB3
AVR_PB2
AVR_PB1
AVR_PB0
H2
HDR-F-2.54_1x8
VCC
GND
AVR_PC5
AVR_PC4
AVR_PC3
AVR_PC2
AVR_PC1
AVR_PC0
H3
HDR-F-2.54_1x8
VCC
GND
AVR_PD7
AVR_PD6
AVR_PD5
AVR_PD4
AVR_PD3
AVR_PD2
DC Power In
DC1
DC-005 5.5-2.0MM
D1
1N4007 Tube
VIN
GND
5V Regulator
U2
L7805CV-DG
VIN
IN
OUT
GND
C3
100uF
C4
330nF
C6
100nF
C5
100uF
REG_VCC
GND
VCC Select
H5
HDR-F-2.54_1x3
SERIAL_VCC
REG_VCC
VCC
Serial Interface
J2
HDR-M-2.54_1x4
SERIAL_VCC
AVR_RX
AVR_TX
GND
AVR ICSP Header
J1
HDR-M-2.54_2x3
AVR_PB4
AVR_PB5
RESET
VCC
AVR_PB3
GND
Onboard LEDs
R1
330Ω
VCC
U4
1254-10SURT/S530-A3
R2
330Ω
AVR_PB5
U5
1254-10SURT/S530-A3
GND
MISC IO Header
H4
HDR-F-2.54_1x4
AREF
RESET
GND
VCC
AVR 16MHz Clock
C8
22pF
AVR_XTAL1
GND
C9
22pF
X1
16MHz
AVR_XTAL2
AVR RESET Circuitry
KEY1
K4-6×6_TH
RESET
VCC
R3
10kΩ
AVR_RESET
GND
AVR VREF
AVR_AREF
AREF
C7
100nF
GND